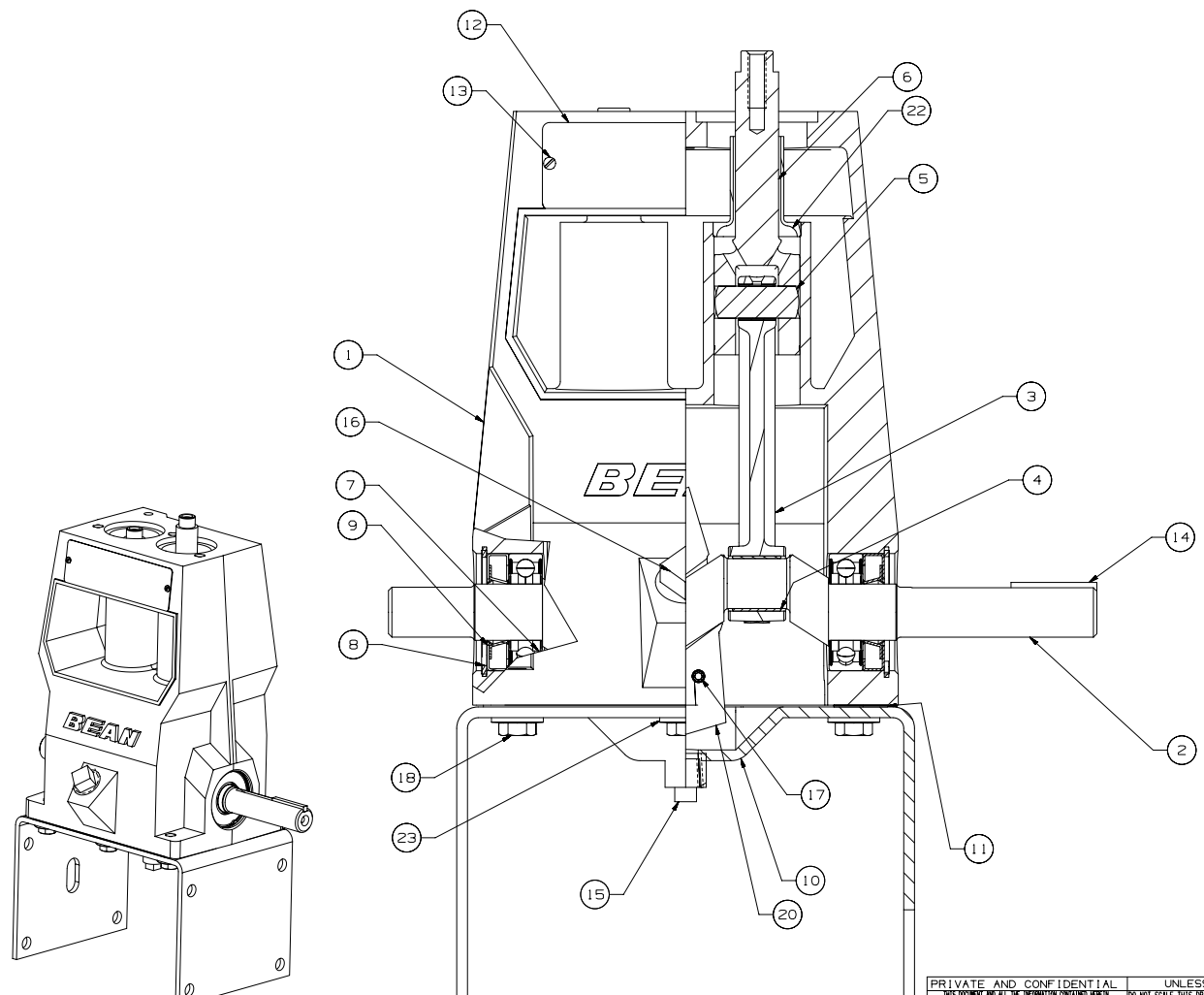

ITEM	DESCRIPTION	QTY
1	POWER FRAME:	1
2	CRANKSHAFT:	1
3	CONNECTING ROD:	2
4	ROD BEARING; HALF SHELL	4
5	WRIST PIN;	2
6	CROSSHEAD:	2
7	BALL BEARING:	2
8	RETAINING RING;	2
9	SHAFT SEAL:	2
10	BACK COVER:	1
11	GASKET: BACK COVER	1
12	NAMEPLATE	1
13	SELF TAPPING SCREW:	2
14	KEY: 3/16 SQ X 1.5 LG	1
15	PIPE PLUG: 1/4 NPT	1
16	PIPE PLUG: SQ HEAD, 3/4 NPT	1
17	HH SCREW: 10-24 X .75LG	2
18	CAP SCREW: HEX HEAD, 3/8 X .75 LG	6
19	BOLTING STRIP: NOT SHOWN	1
20	OIL SLINGER: RH	1
21	HEX NUT: #10 NOT SHOWN	2
22	SLEEVE;	2
23	WASHER: BELLEVILLE, 3/8	6

PRIVATE AND CONFIDENTIAL
THIS DOCUMENT AND ALL THE INFORMATION CONTAINED HEREIN ARE THE CONFIDENTIAL AND EXCLUSIVE PROPERTY OF FMC TECHNOLOGIES AND MAY NOT BE REPRODUCED, USED, DISCLOSED, OR MADE PUBLIC IN ANY MANNER PRIOR TO EXPRESS WRITTEN AUTHORIZATION BY FMC TECHNOLOGIES. THIS DOCUMENT IS ACCEPTED PURSUANT TO AGREEMENT TO THE FOREGOING, AND MUST BE RETURNED UPON DEMAND.
MANUFACTURER AGREES THAT ARTICLES MADE IN ACCORDANCE WITH THIS DOCUMENT SHALL BE CONSIDERED FMC TECHNOLOGIES' DESIGN, AND THAT IDENTICAL ARTICLES OR PARTS THEREOF SHALL NOT BE MANUFACTURED FOR THE USE OR SALE BY MANUFACTURER OR ANY OTHER PERSON OR ENTITY WITHOUT PRIOR EXPRESS WRITTEN AUTHORIZATION BY FMC TECHNOLOGIES.

UNLESS OTHERWISE SPECIFIED
DO NOT SCALE THIS DRAWING
ALL DIMENSIONS ARE IN INCHES [MM]
BREAK SHARP EDGES .015 [.381] MAXIMUM
INSIDE CORNER RADII .030 [.762] MAXIMUM
THREADS CONFORM TO FEDERAL STANDARD H-28
TAPERED THREADS CONFORM TO API 6A
BOLT HOLES MUST STRADDLE COMMON CENTERLINE
FINISH 250 RMS
ALL DIA'S CONCENTRIC WITHIN .010 [.254] T.I.R.

TOLERANCE
.X -- ± .030 [.762]
.XX -- ± .015 [.381]
.XXX -- ± .005 [.127]
ANGLE -- ± 30'

DESCRIPTION
POWER END ASSEMBLY; A04
RH

DRAWN BY:	STILES, MICHAEL	DATE: 13-JUL-2007
DRAFTING CHECK:	KUNISHIGE, SCOTT	DATE: 17-JUL-2007
DESIGN REVIEW:	EVANS, AARON	DATE: 19-SEP-2007
MANUFACTURING APPROVAL:	CRUZ, GEORGE	DATE: 07-SEP-2007
APPROVED BY:	HEROLD, JOHN R.	DATE: 21-SEP-2007

FMC Technologies

LATEST ECN NO. 5018494 REV. A

DRAWING NUMBER
DU5000008225

COPYRIGHT FMC TECHNOLOGIES

** RELEASED FOR MANUFACTURE ** -- Published: 09/28/2007__11:20:37